GENERAL NOTES:

1. BERTHA COLONIAL SHUTTER SHOWN ON THIS PRODUCT EVALUATION DOCUMENT (P.E.D.) HAS BEEN VERIFIED FOR COMPLIANCE IN ACCORDANCE WITH THE **2023 (8th EDITION)** OF THE FLORIDA BUILDING CODE. THIS COLONIAL SHUTTER MAY BE INSTALLED AT HIGH VELOCITY HURRICANE ZONES.

   DESIGN WIND LOADS SHALL BE DETERMINED AS PER SECTION **1620** OF THE ABOVE MENTIONED CODE, FOR A BASIC WIND SPEED AS REQUIRED BY THE JURISDICTION WHERE THESE SHUTTERS WILL BE INSTALLED FOR A DIRECTIONALITY FACTOR Kd=0.85. **USING ASCE 7–22** AND SHALL NOT EXCEED THE MAXIMUM (A.S.D.) DESIGN PRESSURE RATINGS INDICATED ON NOTE 2.

   IN ORDER TO VERIFY THE ABOVE CONDITION, ULTIMATE DESIGN WIND LOADS DETERMINED PER **ASCE 7–22** SHALL BE FIRST REDUCED TO A.S.D. DESIGN WIND LOADS BY MULTIPLYING THEM BY 0.6 IN ORDER TO TO COMPARE THESE W/ MAX. (A.S.D) DESIGN PRESSURE RATINGS INDICATED ON NOTE 2.

   DESIGN WIND LOADS SHALL BE DETERMINED AS PER SECTION 1620 OF THE ABOVE MENTIONED CODE. IN ORDER TO VERIFY THAT ANCHORS ON THIS P.E.D., AS TESTED, WERE NOT OVERSTRESSED, A 33% INCREASE IN ALLOWABLE STRESS FOR WIND LOADS WAS NOT USED IN THEIR ANALYSIS. HOWEVER, FOR CONNECTIONS INTO WOOD, A 1.60 WIND LOAD DURATION FACTOR WAS USED TO CALCULATE SCREWS SPACINGS, PER NDS 2018.
   BERTHA COLONIAL SHUTTER'S ADEQUACY FOR IMPACT AND FATIGUE RESISTANCE HAS BEEN VERIFIED IN ACCORDANCE WITH SECTION **1626** OF THE ABOVE MENTIONED CODE AS PER AMERICAN TESTING LABORATORY OF SOUTH FLORIDA REPORT # 0926.01–07 AND PER PROTOCOLS TAS 201, 202 & 203.

2. SEE ELEVATIONS ON SHEETS 3 & 9 FOR MAX. A.S.D. DESIGN PRESSURE RATING & MAX. SHUTTER DIMENSIONS.

3. ALL ALUMINUM EXTRUSIONS SHALL BE ALUMINUM ASSOCIATION 6063–T6 ALLOY AND TEMPER, WITH Fy= 25.0 ksi MINIMUM (UNLESS OTHERWISE NOTED). ALL ALUMINUM EXTRUSIONS IN CONTACT WITH DISSIMILAR MATERIALS SHALL COMPLY WITH SECTION III–6 OF THE 2020 ALUMINUM DESIGN MANUAL.

4. ALL SCREWS TO BE STAINLESS STEEL 304 OR 316 AISI SERIES WITH 50 ksi YIELD POINT AND 90 ksi TENSILE STRENGTH & SHALL COMPLY W/ FLORIDA BUILDING CODE SECTION 2411.3.3.4.

5. BOLTS TO BE AISI 304 SERIES STAINLESS STEEL WITH 35 ksi MINIMUM YIELD STRENGTH.

6. ALL ALUMINUM POP RIVETS TO BE 5052 ALUMINUM ALLOY WITH ALUMINUM MANDREL.

7. ANCHORS TO WALL SHALL BE AS FOLLOWS: (UNLESS OTHERWISE NOTED)

   (A) TO EXISTING WOOD FRAME WALL: SOUTHERN PINE No.2, G=0.55.
   – 1/4"ø ULTRACON ANCHORS AS MANUFACTURED BY ELCO CONSTRUCTION PRODUCTS.

   NOTES:
   A.1) MINIMUM THREADED PENETRATION OF ULTRACON INTO WOOD SHALL BE 1 1/2".

   A.2) IN CASE THAT PRECAST STONE, PLYWOOD OR PRECAST CONCRETE PANELS BE FOUND ON THE EXISTING WALL, ANCHORS SHALL BE LONG ENOUGH TO REACH THE MAIN STRUCTURE BEHIND SUCH PANELS. ANCHORAGE SHALL BE AS INDICATED ON NOTES A.1).

   (B) TO EXISTING POURED CONCRETE MIN. (f'c = 3192 p.s.i) OR ASTM C–90 CONCRETE BLOCK
   – 1/4" ø ULTRACON ANCHORS AS MANUFACTURED BY ELCO CONSTRUCTION PRODUCTS.

   NOTES:
   B.1) MINIMUM EMBEDMENT OF ULTRACON INTO POURED CONCRETE SHALL BE 1 3/4" AND INTO THE CONCRETE BLOCK UNIT SHALL BE 1 1/4".

   B.2) IN CASE THAT PRECAST STONE, STUCCO OR PRECAST CONCRETE PANELS BE FOUND ON THE EXISTING WALL, ANCHORS SHALL BE LONG ENOUGH TO REACH THE MAIN STRUCTURE BEHIND SUCH PANELS. ANCHORAGE SHALL BE AS INDICATED ON NOTES B.1).

   (C) ANCHORS SHALL BE INSTALLED FOLLOWING ALL OF THE RECOMMENDATIONS AND SPECIFICATIONS OF THE ANCHOR'S MANUFACTURER.

8. EACH SHUTTER SHALL HAVE A LEGIBLE AND READILY VISIBLE MARKING INSTRUCTING OWNER OR TENANT TO SECURE SHUTTER WITH STORM BARS & SAFETY BOLTS DURING PERIODS OF HURRICANE WARNINGS.

9. IT SHALL BE THE RESPONSIBILITY OF THE CONTRACTOR TO VERIFY THE SOUNDNESS OF THE STRUCTURE WHERE SHUTTER IS TO BE ATTACHED TO INSURE PROPER ANCHORAGE. CONTRACTOR TO SEAL/CAULK ALL SHUTTER COMPONENT EDGES WHICH REMAIN IN CONTINUOUS CONTACT WITH THE BUILDING TO PREVENT WIND/RAIN INTRUSION.

10. OWNER TO BE RESPONSIBLE FOR PROVIDING A SUITABLE PLATFORM OR BALCONY WHEN SECURING UNIT DURING HURRICANE WARNINGS.

11. BERTHA COLONIAL SHUTTER'S INSTALLATION SHALL COMPLY WITH SPECS INDICATED IN THIS DRAWING PLUS ANY BUILDING AND ZONING REGULATIONS PROVIDED BY THE JURISDICTION WHERE PERMIT IS APPLIED TO.

12. SHUTTER MANUFACTURER'S LABEL SHALL BE LOCATED ON A READILY VISIBLE LOCATION AT COLONIAL SHUTTER IN ACCORDANCE WITH SECTION 1709.9.2 OF FLORIDA BUILDING CODE. ONE LABEL SHALL BE PLACED FOR EVERY OPENING.

13. (a) THIS PRODUCT EVALUATION DOCUMENT (P.E.D.) PREPARED BY THIS ENGINEER IS GENERIC AND DOES NOT PROVIDE INFORMATION FOR A SITE SPECIFIC PROJECT; i. e. WHERE THE SITE CONDITIONS DEVIATE FROM THE P.E.D.

    (b) CONTRACTOR TO BE RESPONSIBLE FOR THE SELECTION, PURCHASE AND INSTALLATION INCLUDING LIFE SAFETY OF THIS PRODUCT, BASED ON THIS PRODUCT EVALUATION DOCUMENT, PROVIDED HE/SHE DOES NOT DEVIATE FROM THE CONDITIONS DETAILED ON THIS DOCUMENT. CONSTRUCTION SAFETY AT SITE IS THE CONTRACTOR'S RESPONSIBILITY.

    (c) THIS PRODUCT EVALUATION DOCUMENT WILL BE CONSIDERED INVALID IF ALTERED BY ANY MEANS.

    (d) SITE SPECIFIC PROJECTS SHALL BE PREPARED BY A FLORIDA REGISTERED ENGINEER OR ARCHITECT WHICH WILL BECOME THE ENGINEER OF RECORD (E.O.R.) FOR THE PROJECT AND WHO WILL BE RESPONSIBLE FOR THE PROPER USE OF THE P.E.D. ENGINEER OF RECORD, ACTING AS A DELEGATED ENGINEER TO THE P.E.D. ENGINEER, SHALL SUBMIT TO THIS LATTER THE SITE SPECIFIC DRAWINGS FOR REVIEW.

    (e) ORIGINAL P.E.D. SHALL BEAR THE DATE AND ORIGINAL SEAL AND SIGNATURE OF THE PROFESSIONAL ENGINEER OF RECORD THAT PREPARED IT.

THIS DRAWING SHALL ONLY BE USED TO OBTAIN PERMITS IN THE STATE OF FLORIDA

WALTER A. TILLIT JR. LICENSE No. 44167 STATE OF FLORIDA PROFESSIONAL ENGINEER

7/21/2023

FLORIDA BUILDING CODE (High Velocity Hurricane Zone)

©2023 TILTECO, INC.

TILTECO INC.
TILLIT TESTING & ENGINEERING COMPANY
6355 N.W. 36th. St., Ste. 305, VIRGINIA GARDENS, FLORIDA 33166
Phone : (305)871–1530 , Fax : (305)871–1531
CA–0006719
WALTER A. TILLIT Jr., P.E.
FLORIDA Lic. # 44167

ASSA / BERTHA COLONIAL SHUTTER (WITH STORM BARS)

AMERICAN SHUTTER SYSTEMS ASSOC., INC.
4268 WEST ROADS DRIVE
WEST PALM BEACH, FL. 33407
PHONE: (800)432–2204
FAX: (561)209–8380

REV. No	DESCRIPTION	DATE	REV. No	DESCRIPTION	DATE
1	OLD 20–182	7/21/23	3	–	–
2	–	–	4	–	–

Y.M.
DRAWN BY:

7/21/2023
DATE:

23–132
DRAWING No

SHEET 1 OF 14

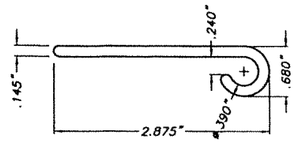

(B') FLAT HINGE

ALUMINUM EXTRUSION 2.375" LONG AT (D)

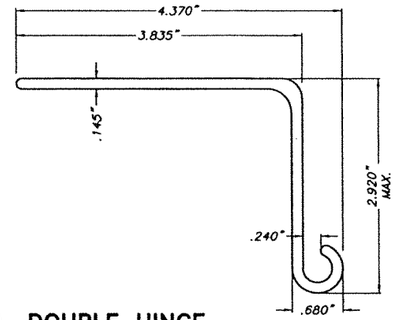

(D') DOUBLE HINGE

ALUMINUM EXTRUSION, 2.375" LONG

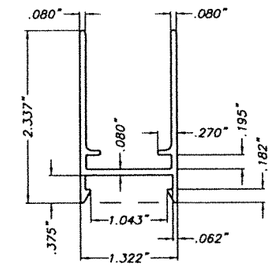

(E) COLONIAL FRAME

ALUMINUM EXTRUSION

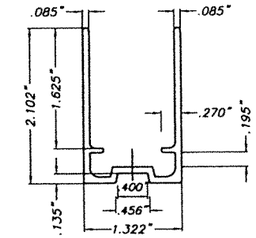

(E1) ALTERNATE COLONIAL FRAME

ALUMINUM EXTRUSION

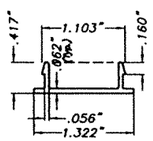

(F) SNAP CAP

ALUMINUM EXTRUSION

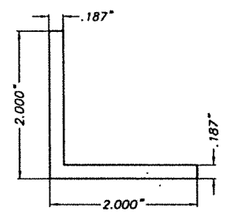

(G) CORNER KEY

1 1/8" LONG
ALUMINUM EXTRUSION

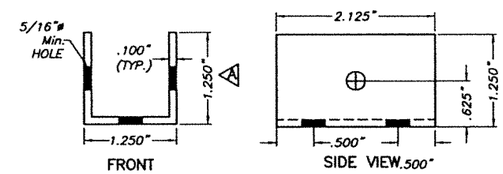

(N) H.V. STORM BAR CLIP

2 1/8" LONG.
ALUMINUM EXTRUSION

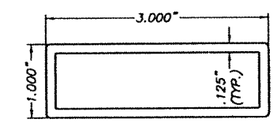

(O1) STORM BAR TYPE 2

ALUMINUM EXTRUSION

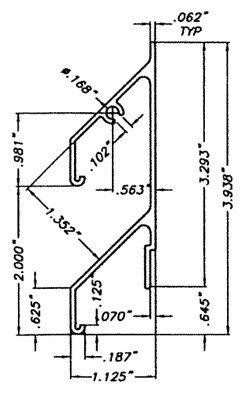

(H) HALF SHUTTER BLADE

ALUMINUM EXTRUSION

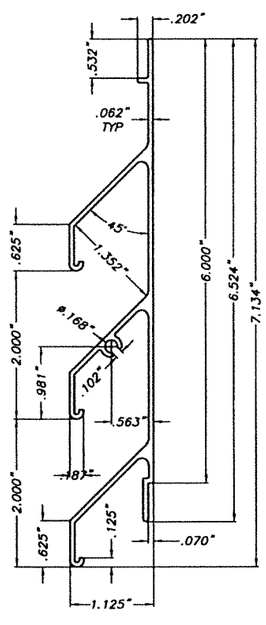

(I) SHUTTER BLADE

ALUMINUM EXTRUSION

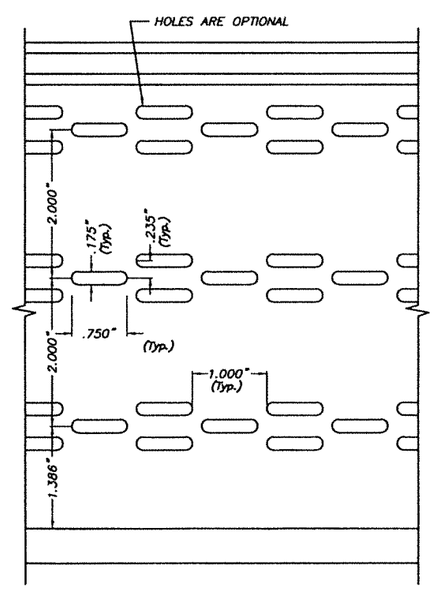

SHUTTER BLADE ELEVATION

ALUMINUM EXTRUSION

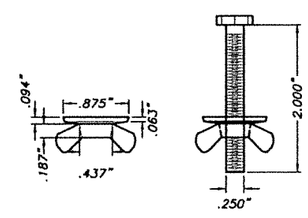

(Q1) 1/4"ø-20x2" 304 SERIES S.S. HEX HEAD BOLT W/A DIE CAST (ZINC #7) NICKEL PLATED WASHER WINGNUT

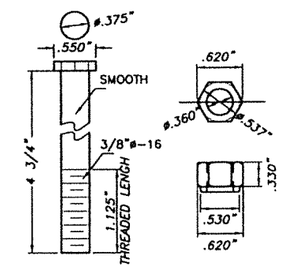

(Q2) ALUMINUM PIN FOR HINGE

6061-T6 ALUMINUM ALLOY

COMPONENTS

SCALE: 1/2" = 1"

WALTER A. TILLIT JR. LICENSE No. 44167 STATE OF FLORIDA PROFESSIONAL ENGINEER
7/21/2023

FLORIDA BUILDING CODE (High Velocity Hurricane Zone)

© 2023 TILTECO, INC.

TILTECO INC.
TILLIT TESTING & ENGINEERING COMPANY
6355 N.W. 36th. St., Ste. 305, VIRGINIA GARDENS, FLORIDA 33166
Phone : (305)871-1530 . Fax : (305)871-1531
CA-0006719
WALTER A. TILLIT Jr., P.E.
FLORIDA Lic. # 44167

ASSA / BERTHA COLONIAL SHUTTER (WITH STORM BARS)

AMERICAN SHUTTER SYSTEMS ASSOC., INC.
4268 WEST ROADS DRIVE
WEST PALM BEACH, FL. 33407
PHONE: (800)432-2204
FAX: (561)209-8380

REV. No	DESCRIPTION	DATE	REV. No	DESCRIPTION	DATE
1	OLD 20-182	7/21/23	3	-	-
2	-	-	4	-	-

Y.M.
DRAWN BY:

7/21/2023
DATE:

23-132
DRAWING No

SHEET 2 OF 14

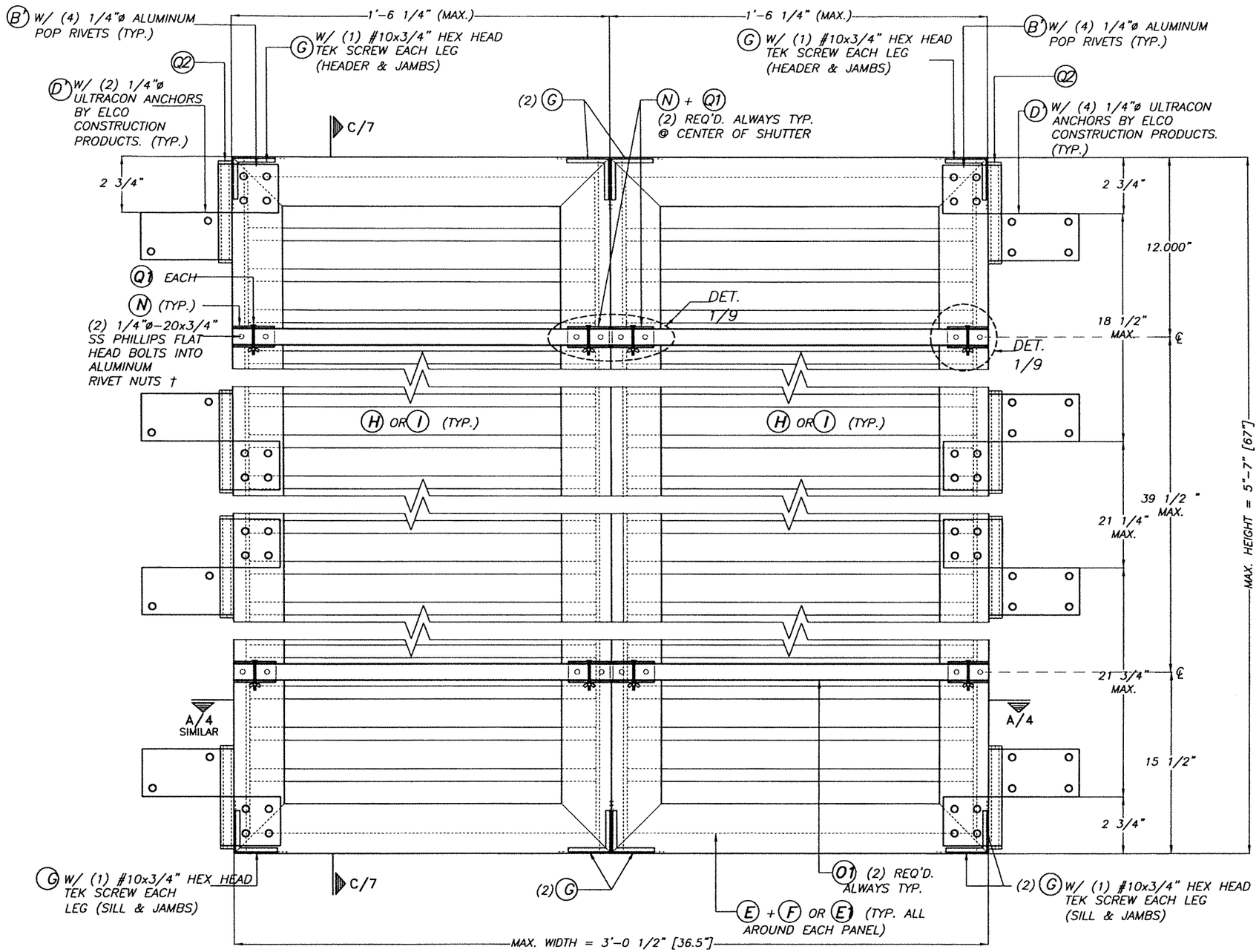

TYPICAL EXTERIOR ELEV. DOUBLE PANEL (HURRICANE POSITION)

SCALE: 3/16"=1"

† 1/4"ø-20x3/4" AS DISTRIBUTED BY ALL POINTS SCREW, BOLT & SPECIALTY CO. (PART # 25CRFNA).

MAXIMUM A.S.D. DESIGN PRESSURE RATING = +60.0, -81.0 p.s.f. FOR INSTALLATION INTO CONCRETE OR CONCRETE BLOCK WALL SUBSTRATE.

WALTER A. TILLIT JR. LICENSE No. 44167 STATE OF FLORIDA PROFESSIONAL ENGINEER 7/26/2023

FLORIDA BUILDING CODE (High Velocity Hurricane Zone)

©2023 TILTECO, INC.

TILTECO INC.
TILLIT TESTING & ENGINEERING COMPANY
6355 N.W. 36th. St., Ste. 305, VIRGINIA GARDENS, FLORIDA 33166
Phone : (305)871-1530 Fax : (305)871-1531
CA-0006719
WALTER A. TILLIT Jr., P.E.
FLORIDA Lic. # 44167

ASSA / BERTHA COLONIAL SHUTTER (WITH STORM BARS)

AMERICAN SHUTTER SYSTEMS ASSOC., INC.
4268 WEST ROADS DRIVE
WEST PALM BEACH, FL. 33407
PHONE: (800)432-2204
FAX: (561)209-8380

REV. No	DESCRIPTION	DATE	REV. No	DESCRIPTION	DATE
1	OLD 20-182	7/21/23	3	–	–
2	–	–	4	–	–

Y.M.
DRAWN BY:

7/21/2023
DATE:

23-132
DRAWING No

SHEET 3 OF 14

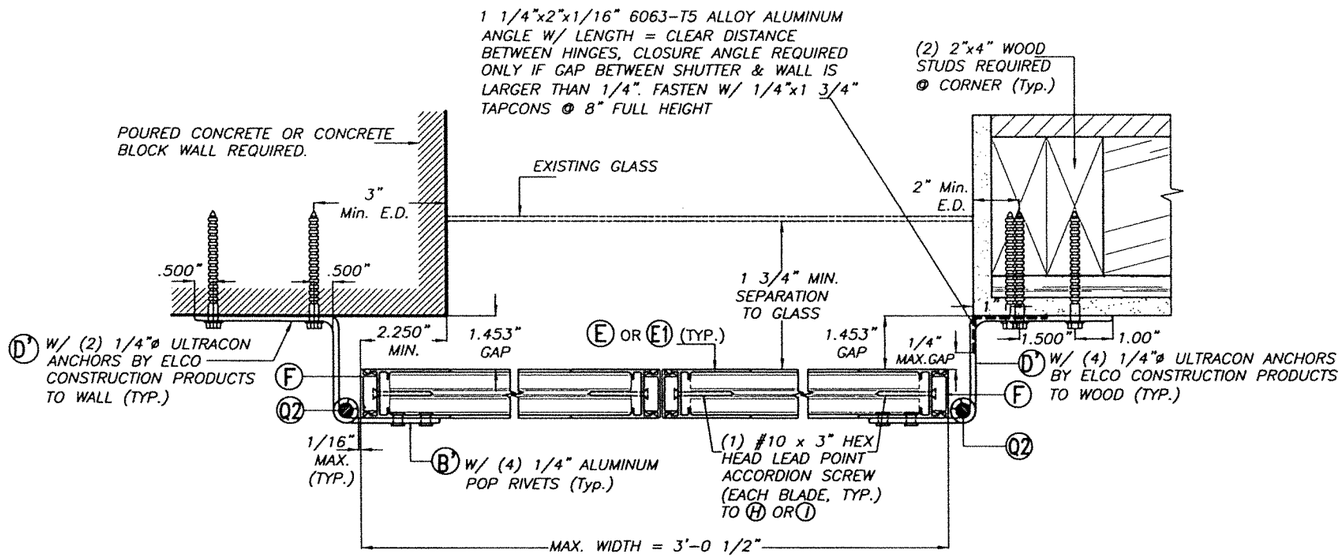

1

SECTION A-A

SCALE 1/4"=1"

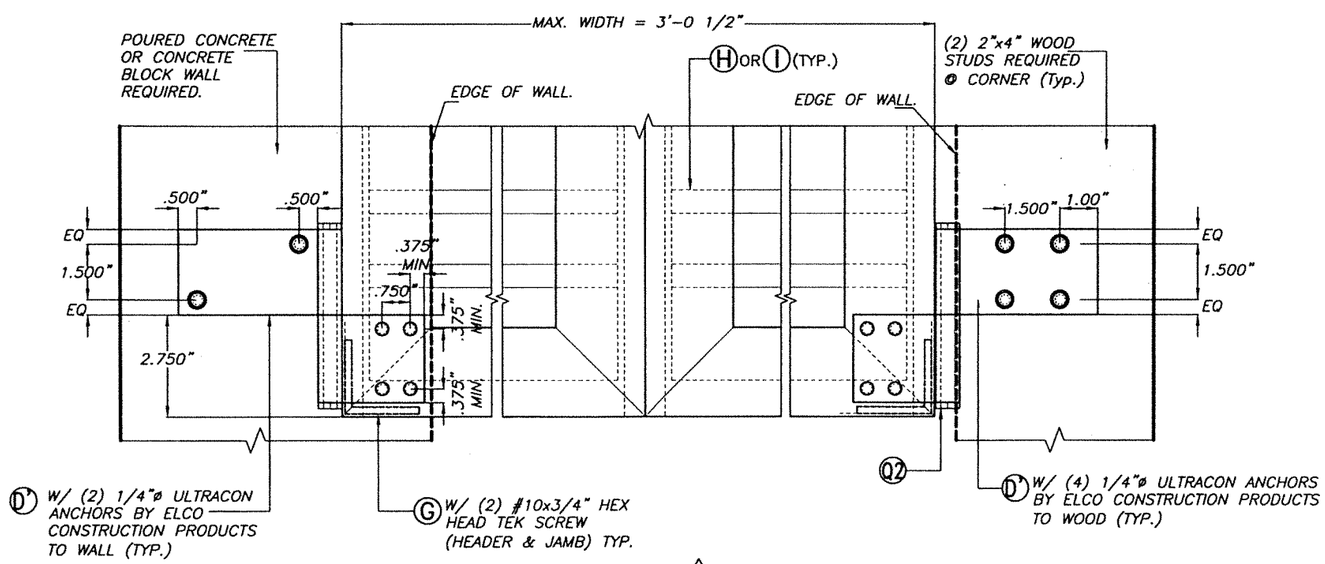

VIEW 1
(PARTIAL ELEVATION)

SCALE 1/4"=1"

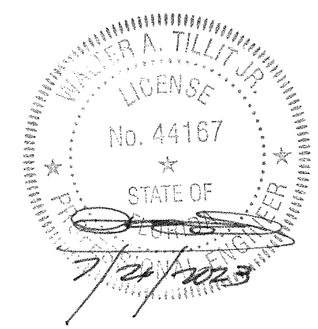

FLORIDA BUILDING CODE (High Velocity Hurricane Zone)

© 2023 TILTECO, INC.

TILTECO INC.
TILLIT TESTING & ENGINEERING COMPANY
6355 N.W. 36th. St., Ste. 305, VIRGINIA GARDENS, FLORIDA 33166
Phone : (305)871-1530 . Fax : (305)871-1531
CA-0006719
WALTER A. TILLIT Jr., P.E.
FLORIDA Lic. # 44167

ASSA / BERTHA COLONIAL SHUTTER (WITH STORM BARS)

AMERICAN SHUTTER SYSTEMS ASSOC., INC.
4268 WEST ROADS DRIVE
WEST PALM BEACH, FL. 33407
PHONE: (800)432-2204
FAX: (561)209-8380

REV. No	DESCRIPTION	DATE	REV. No	DESCRIPTION	DATE
1	OLD 20-162	7/21/23	3	–	–
2	–	–	4	–	–

Y.M.
DRAWN BY:

7/21/2023
DATE:

23-132
DRAWING No

SHEET 4 OF 14

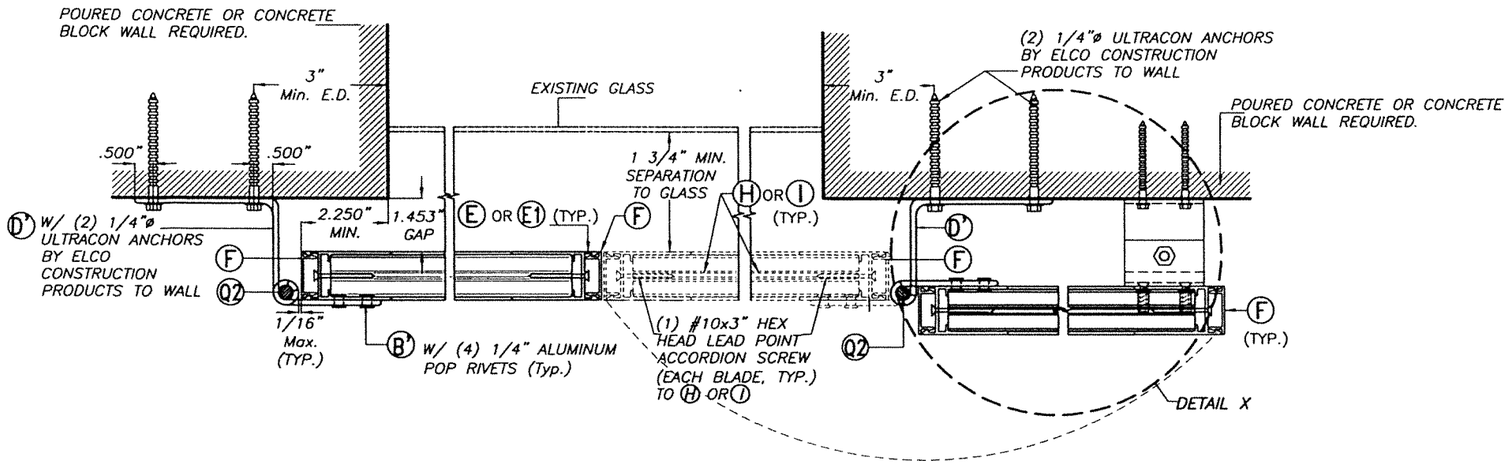

TYPICAL PLAN (NON HURRICANE POSITION)

SCALE 1/4"=1"

† 1/4"ø–20x3/4" AS DISTRIBUTED BY ALL POINTS SCREW, BOLT & SPECIALTY CO. (PART # 25CRFNA).

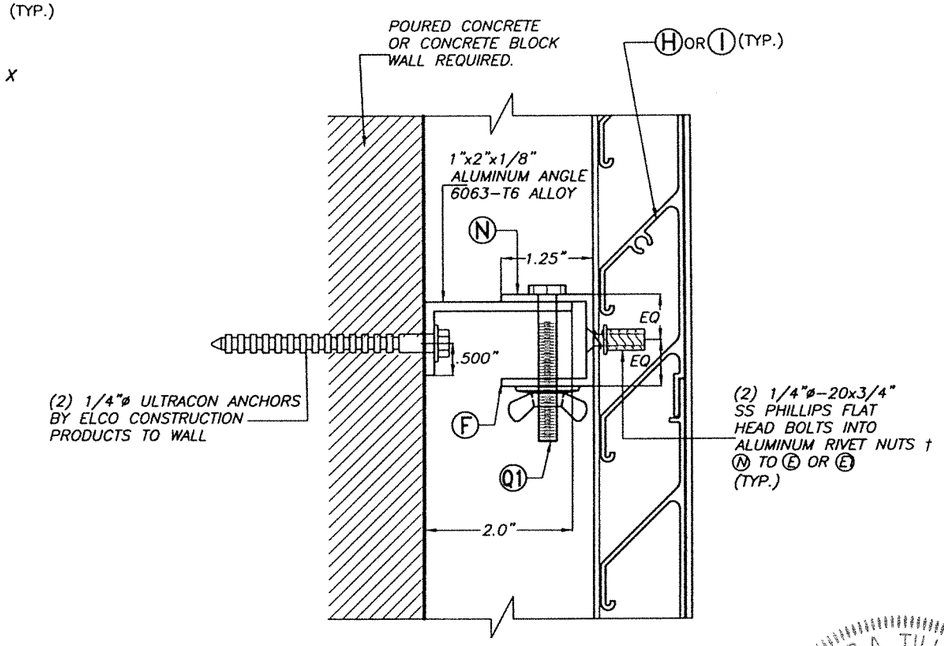

ELEVATION Y–Y

SCALE 1/8"=1"

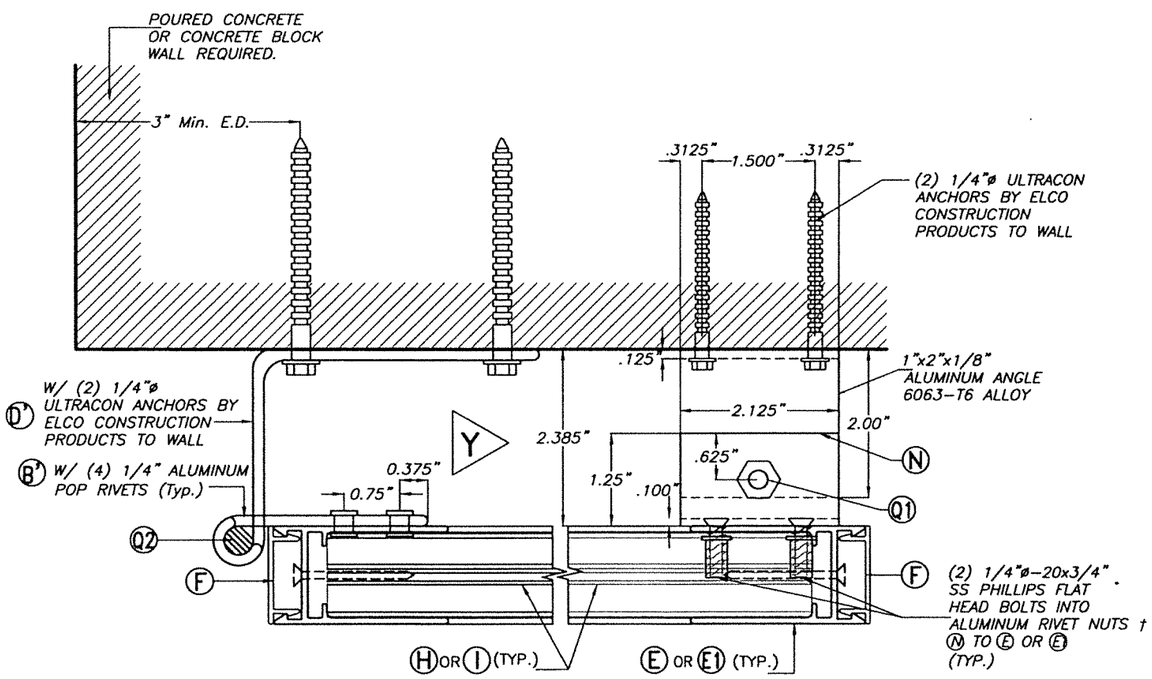

DETAIL X (NON HURRICANE POSITION)

SCALE 1/8"=1"

WALTER A. TILLIT JR. LICENSE No. 44167 STATE OF FLORIDA PROFESSIONAL ENGINEER

7/21/2023

FLORIDA BUILDING CODE (High Velocity Hurricane Zone)

© 2023 TILTECO, INC.

TILTECO INC.
TILLIT TESTING & ENGINEERING COMPANY
6355 N.W. 36th. St., Ste. 305, VIRGINIA GARDENS, FLORIDA 33166
Phone : (305)871–1530 . Fax : (305)871–1531
CA–0006719
WALTER A. TILLIT Jr., P.E.
FLORIDA Lic. # 44167

ASSA / BERTHA COLONIAL SHUTTER (WITH STORM BARS)

AMERICAN SHUTTER SYSTEMS ASSOC., INC.
4268 WEST ROADS DRIVE
WEST PALM BEACH, FL. 33407
PHONE: (800)432–2204
FAX: (561)209–8380

REV. No	DESCRIPTION	DATE	REV. No	DESCRIPTION	DATE
1	OLD 20–162	7/21/23	3	–	–
2	–	–	4	–	–

Y.M.
DRAWN BY:

7/21/2023
DATE:

23–132
DRAWING No

SHEET 5 OF 14

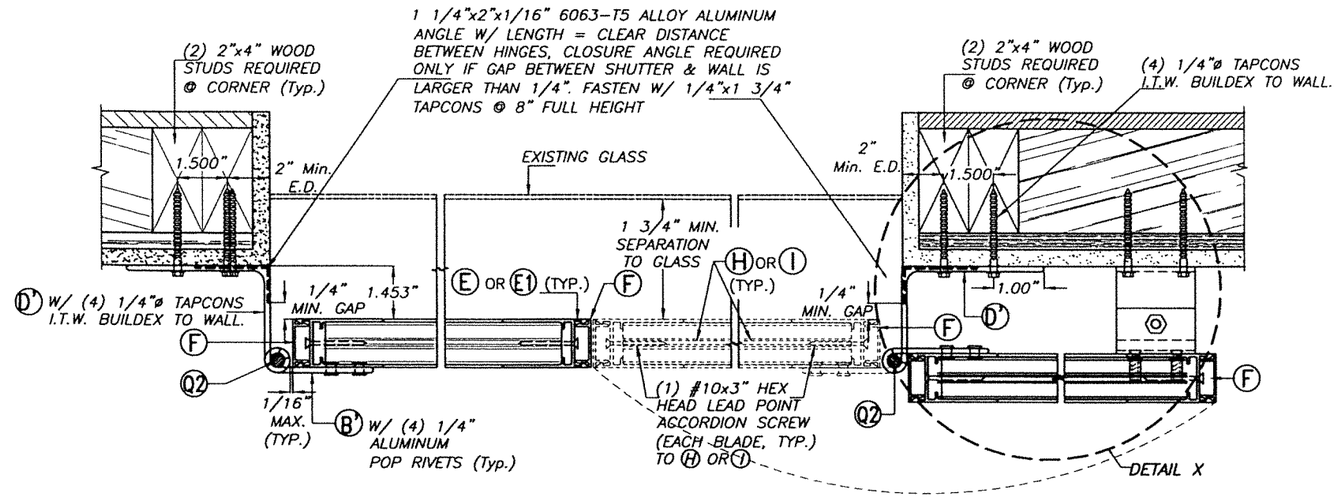

TYPICAL PLAN (NON HURRICANE POSITION)

SCALE 1/4"=1"

† 1/4"ø-20x3/4" AS DISTRIBUTED BY ALL POINTS SCREW, BOLT & SPECIALTY CO. (PART # 25CRFNA).

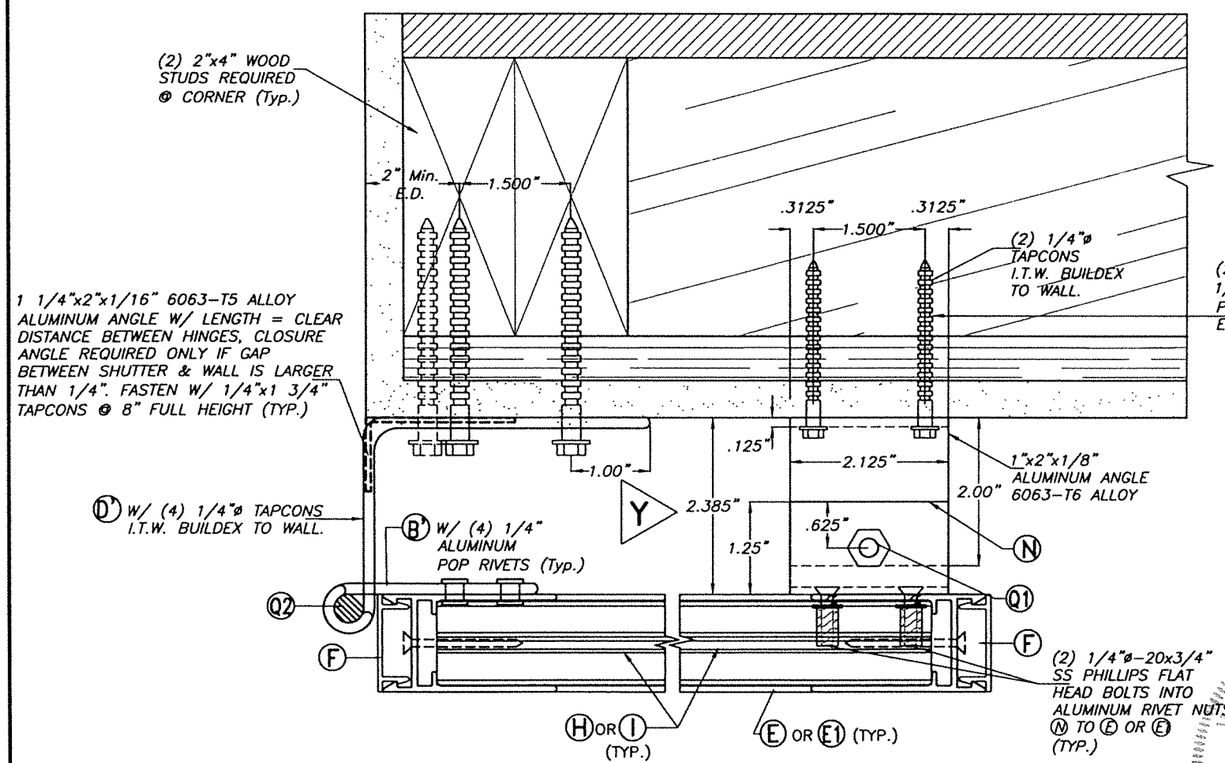

DETAIL X (NON HURRICANE POSITION)

SCALE 1/8"=1"

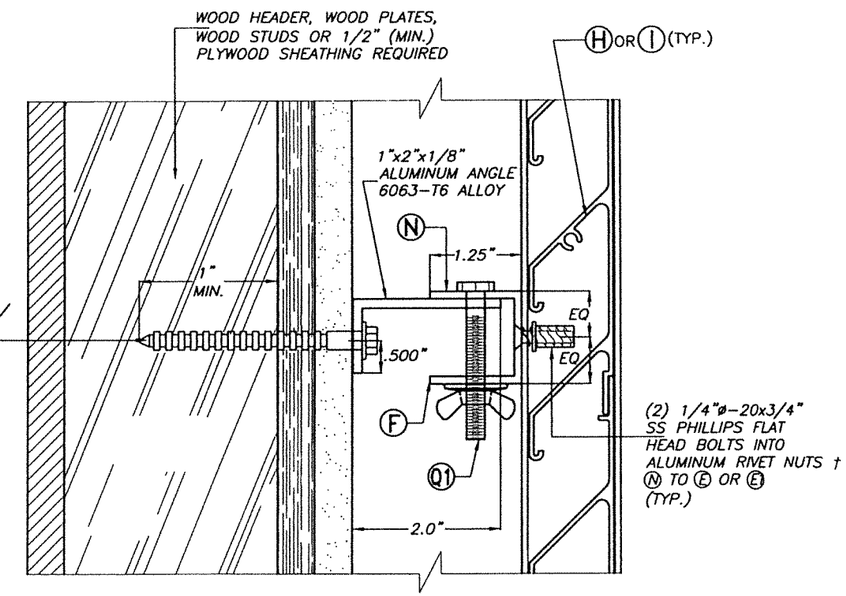

ELEVATION Y-Y

SCALE 1/8"=1"

FLORIDA BUILDING CODE (High Velocity Hurricane Zone)

© 2023 TILTECO, INC.

TILTECO INC.
TILLIT TESTING & ENGINEERING COMPANY
6355 N.W. 36th. St., Ste. 305, VIRGINIA GARDENS, FLORIDA 33166
Phone : (305)871-1530 . Fax : (305)871-1531
CA-0006719
WALTER A. TILLIT Jr., P.E.
FLORIDA Lic. # 44167

ASSA / BERTHA COLONIAL SHUTTER (WITH STORM BARS)

AMERICAN SHUTTER SYSTEMS ASSOC., INC.
4268 WEST ROADS DRIVE
WEST PALM BEACH, FL. 33407
PHONE: (800)432-2204
FAX: (561)209-8380

REV. No	DESCRIPTION	DATE	REV. No	DESCRIPTION	DATE
1	OLD 20-182	7/21/23	3	–	–
2	–	–	4	–	–

Y.M.
DRAWN BY:

7/21/2023
DATE:

23-132
DRAWING No

SHEET 6 OF 14

WALTER A. TILLIT JR. LICENSE No. 44167 STATE OF FLORIDA PROFESSIONAL ENGINEER
7/21/2023

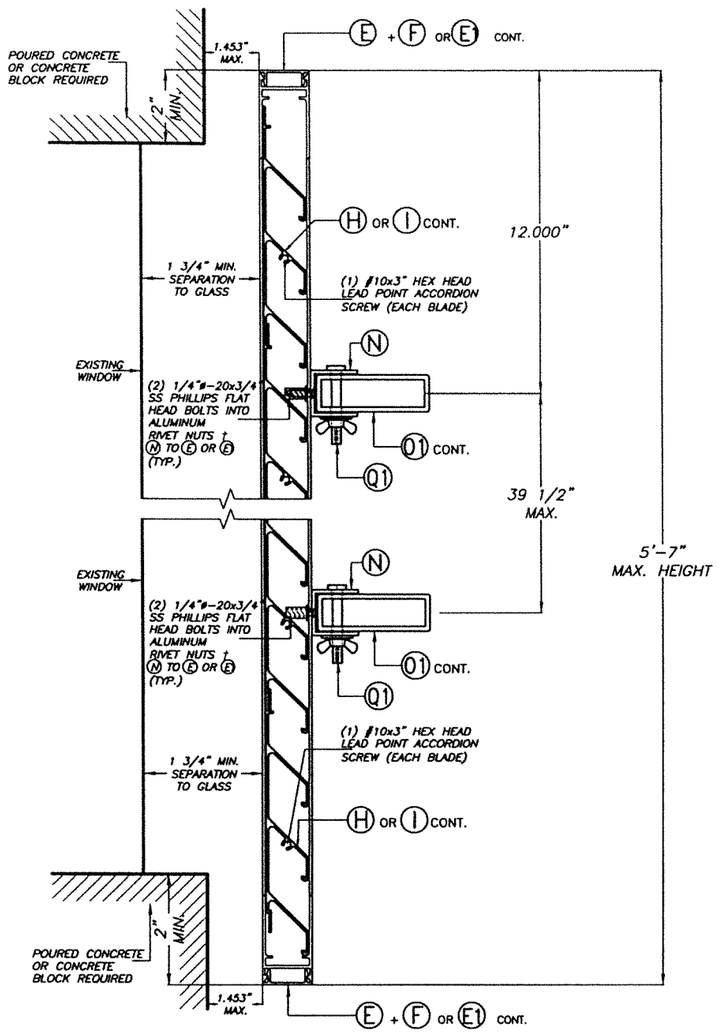

SECTION C–C

(WALL MOUNT)
HURRICANE POSITION
SCALE 1/4"=1"

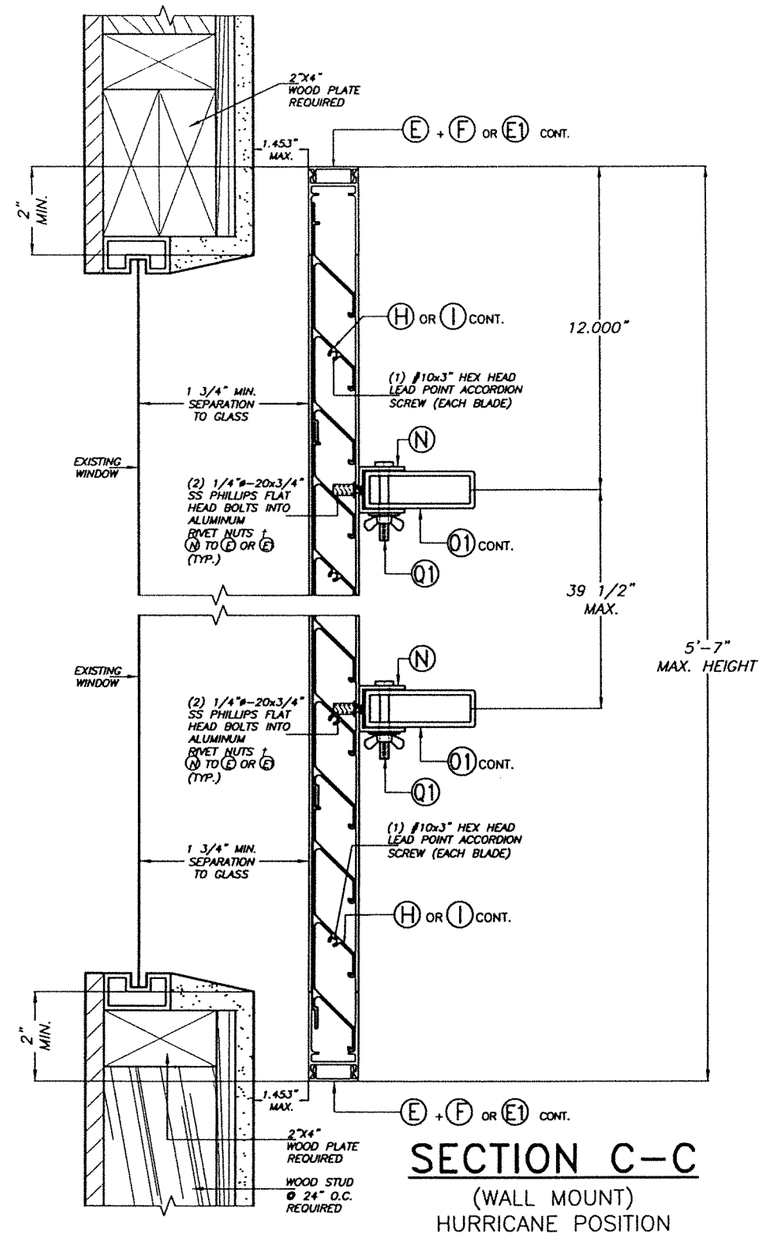

SECTION C–C

(WALL MOUNT)
HURRICANE POSITION
SCALE 1/4"=1"

WALTER A. TILLIT JR. LICENSE No. 44167 STATE OF FLORIDA PROFESSIONAL ENGINEER
7/24/2023

† 1/4"ø-20x3/4"
AS DISTRIBUTED BY ALL POINTS SCREW, BOLT & SPECIALTY CO. (PART #25CRFNA).

FLORIDA BUILDING CODE (High Velocity Hurricane Zone)

© 2023 TILTECO, INC.

TILTECO INC.
TILLIT TESTING & ENGINEERING COMPANY
8355 N.W. 36th. St., Ste. 305, VIRGINIA GARDENS, FLORIDA 33166
Phone : (305)871-1530 . Fax : (305)871-1531
CA-0006719
WALTER A. TILLIT Jr., P.E.
FLORIDA Lic. # 44167

ASSA / BERTHA COLONIAL SHUTTER (WITH STORM BARS)

AMERICAN SHUTTER SYSTEMS ASSOC., INC.
4268 WEST ROADS DRIVE
WEST PALM BEACH, FL. 33407
PHONE: (800)432-2204
FAX: (561)209-8380

REV. No	DESCRIPTION	DATE	REV. No	DESCRIPTION	DATE
1	OLD 20-162	7/21/23	3	–	–
2	–	–	4	–	–

Y.M.
DRAWN BY:

7/21/2023
DATE:

23-132
DRAWING No

SHEET 7 OF 14

† 1/4"ø–20x3/4"
AS DISTRIBUTED BY ALL POINTS SCREW, BOLT & SPECIALTY CO. (PART #25CRFNA).

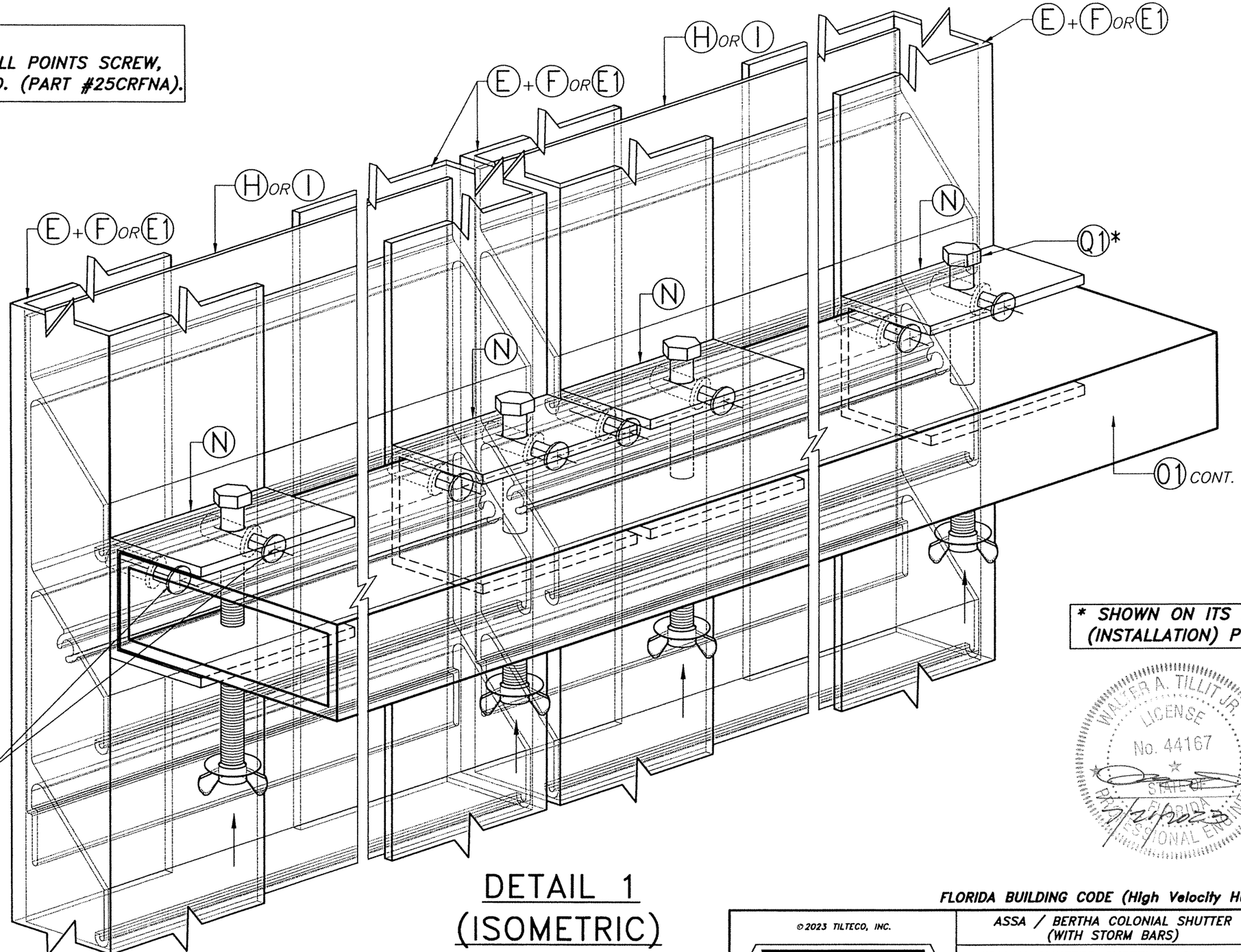

(2) 1/4"ø–20x3/4" SS PHILLIPS FLAT HEAD BOLTS INTO ALUMINUM RIVET NUTS † (N) TO (E) OR (E1) (TYP.)

* SHOWN ON ITS DRIVING (INSTALLATION) POSITION

WALTER A. TILLIT JR. LICENSE No. 44167 STATE OF FLORIDA PROFESSIONAL ENGINEER
7/21/2023

DETAIL 1
(ISOMETRIC)
N.T.S

FLORIDA BUILDING CODE (High Velocity Hurricane Zone)

©2023 TILTECO, INC.

TILTECO INC.
TILLIT TESTING & ENGINEERING COMPANY
6355 N.W. 36th. St., Ste. 305, VIRGINIA GARDENS, FLORIDA 33166
Phone : (305)871-1530 . Fax : (305)871-1531
CA-0006719
WALTER A. TILLIT Jr., P.E.
FLORIDA Lic. # 44167

ASSA / BERTHA COLONIAL SHUTTER (WITH STORM BARS)

AMERICAN SHUTTER SYSTEMS ASSOC., INC.
4268 WEST ROADS DRIVE
WEST PALM BEACH, FL. 33407
PHONE: (800)432-2204
FAX: (561)209-8380

REV. No	DESCRIPTION	DATE	REV. No	DESCRIPTION	DATE
1	OLD 20-162	7/21/23	3	–	–
2	–	–	4	–	–

Y.M.
DRAWN BY:

7/21/2023
DATE:

23-132
DRAWING No

SHEET 8 OF 14

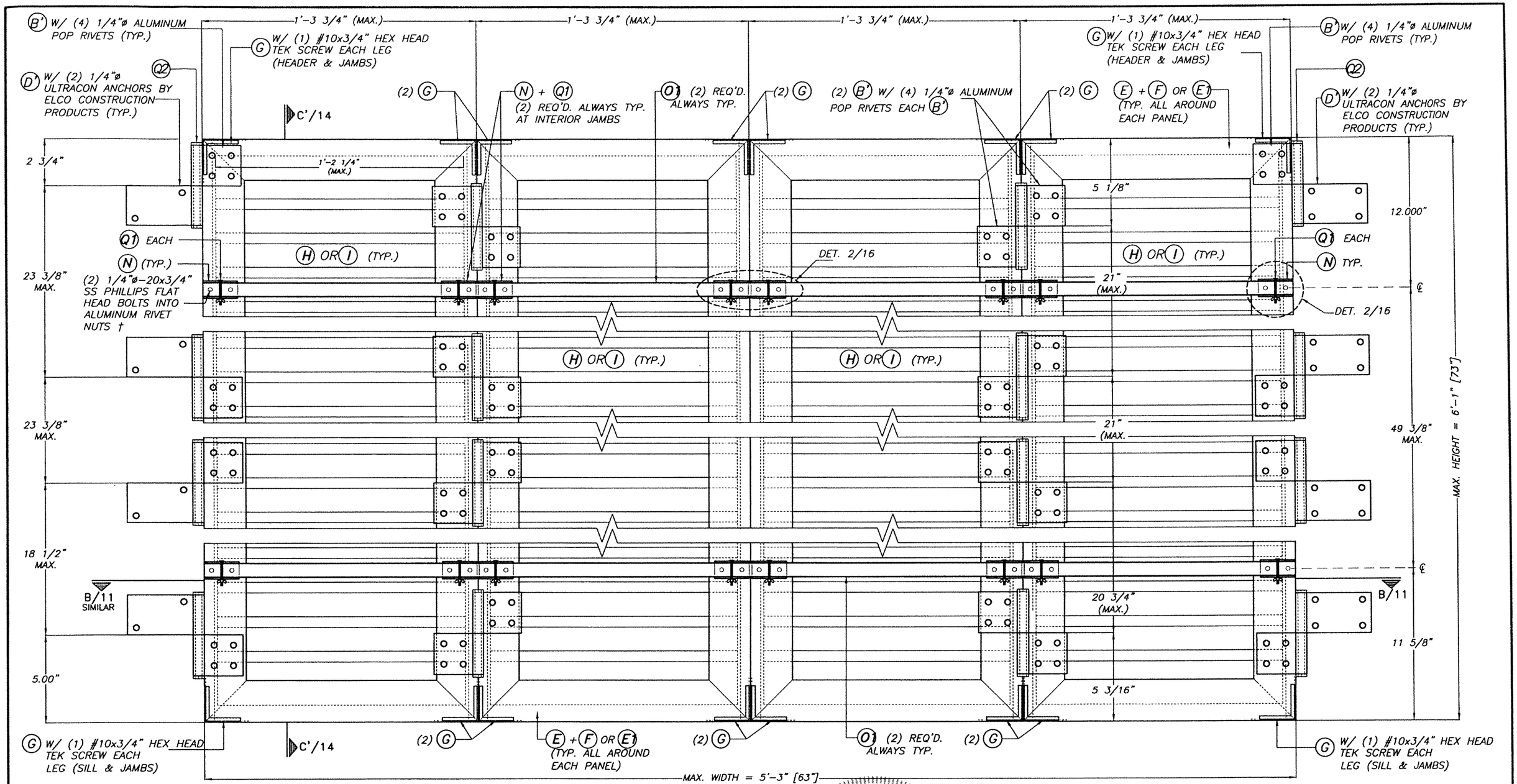

TYPICAL EXTERIOR ELEV. QUADRUPLE PANEL FOR (HURRICANE POSITION)

SCALE: 3/16"=1"

† 1/4"ø-20x3/4" AS DISTRIBUTED BY ALL POINTS SCREW, BOLT & SPECIALTY CO. (PART # 25CRFNA).

MAXIMUM A.S.D. DESIGN PRESSURE RATING = +51.0, -70.0 p.s.f. FOR INSTALLATION INTO CONCRETE OR CONCRETE BLOCK WALL SUBSTRATE.

WALTER A. TILLIT JR. LICENSE No. 44167 STATE OF FLORIDA PROFESSIONAL ENGINEER

FLORIDA BUILDING CODE (High Velocity Hurricane Zone)

© 2023 TILTECO, INC.

TILTECO INC.
TILLIT TESTING & ENGINEERING COMPANY
6355 N.W. 36th. St., Ste. 305, VIRGINIA GARDENS, FLORIDA 33166
Phone : (305)871-1530 . Fax : (305)871-1531
CA-0006719
WALTER A. TILLIT Jr., P.E.
FLORIDA Lic. # 44167

ASSA / BERTHA COLONIAL SHUTTER (WITH STORM BARS)

AMERICAN SHUTTER SYSTEMS ASSOC., INC.
4268 WEST ROADS DRIVE
WEST PALM BEACH, FL. 33407
PHONE: (800)432-2204
FAX: (561)209-8380

REV. No	DESCRIPTION	DATE	REV. No	DESCRIPTION	DATE
1	OLD 20-182	7/21/23	3	–	–
2	–	–	4	–	–

Y.M.
DRAWN BY:

7/21/2023
DATE:

23-132
DRAWING No

SHEET 9 OF 14

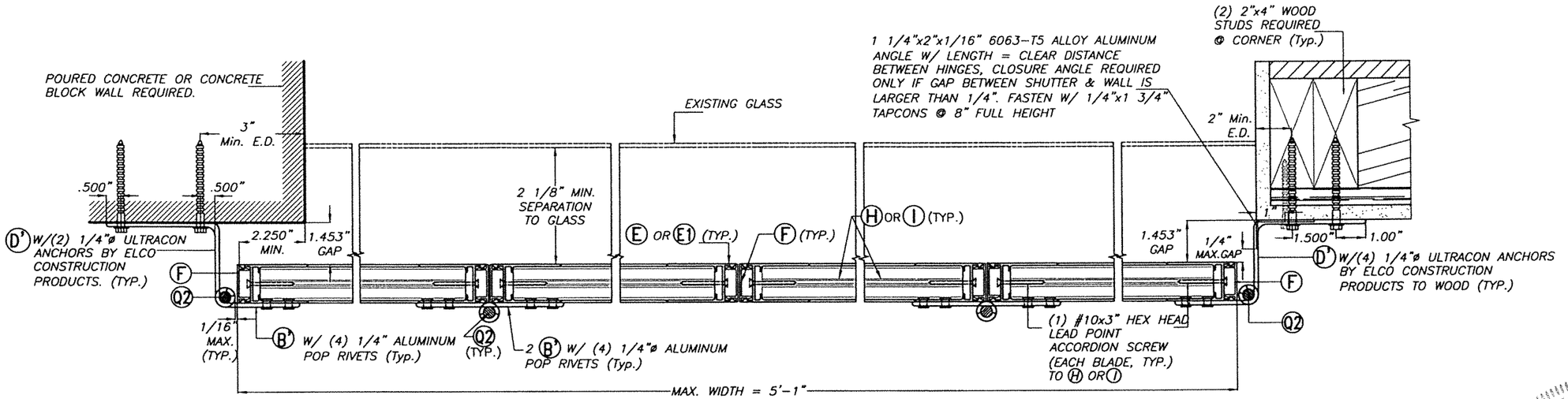

1

SECTION B–B

SCALE 1/4"=1"

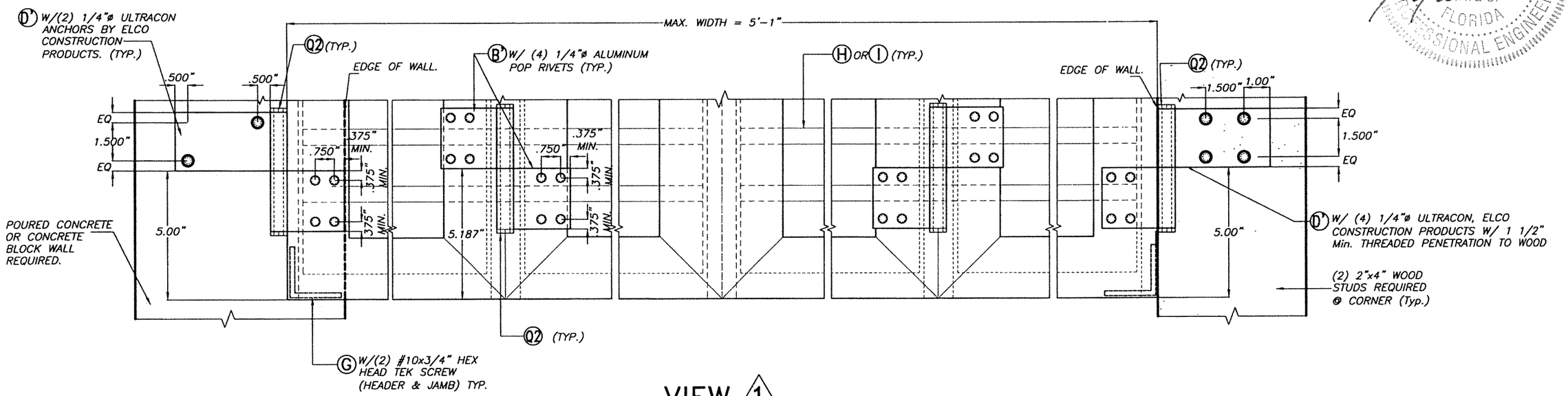

VIEW 1
(PARTIAL ELEVATION AT BOTTOM)

SCALE 1/4"=1"

WALTER A. TILLIT JR. LICENSE ~~No. 44167~~ 7/21/2023 FLORIDA PROFESSIONAL ENGINEER

FLORIDA BUILDING CODE (High Velocity Hurricane Zone)

© 2023 TILTECO, INC.

TILTECO INC.
TILLIT TESTING & ENGINEERING COMPANY
6355 N.W. 36th. St., Ste. 305, VIRGINIA GARDENS, FLORIDA 33166
Phone : (305)871-1530 . Fax : (305)871-1531
CA-0006719
WALTER A. TILLIT Jr., P.E.
FLORIDA Lic. # 44167

ASSA / BERTHA COLONIAL SHUTTER (WITH STORM BARS)

AMERICAN SHUTTER SYSTEMS ASSOC., INC.
4268 WEST ROADS DRIVE
WEST PALM BEACH, FL. 33407
PHONE: (800)432-2204
FAX: (561)209-8380

REV. No	DESCRIPTION	DATE	REV. No	DESCRIPTION	DATE
1	OLD 20-162	7/21/23	3	–	–
2	–	–	4	–	–

Y.M.
DRAWN BY:

7/21/2023
DATE:

23-132
DRAWING No

SHEET 10 OF 14

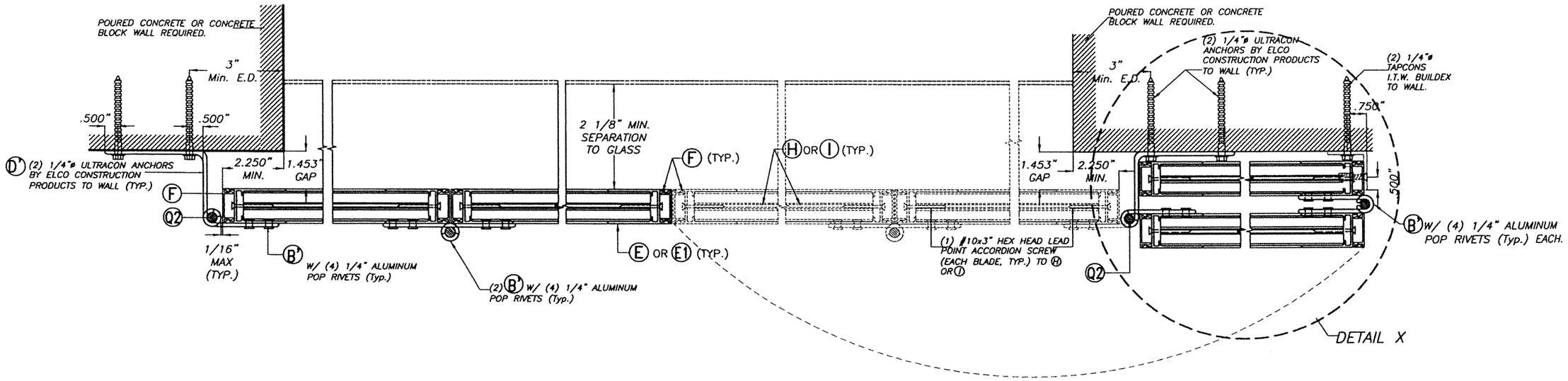

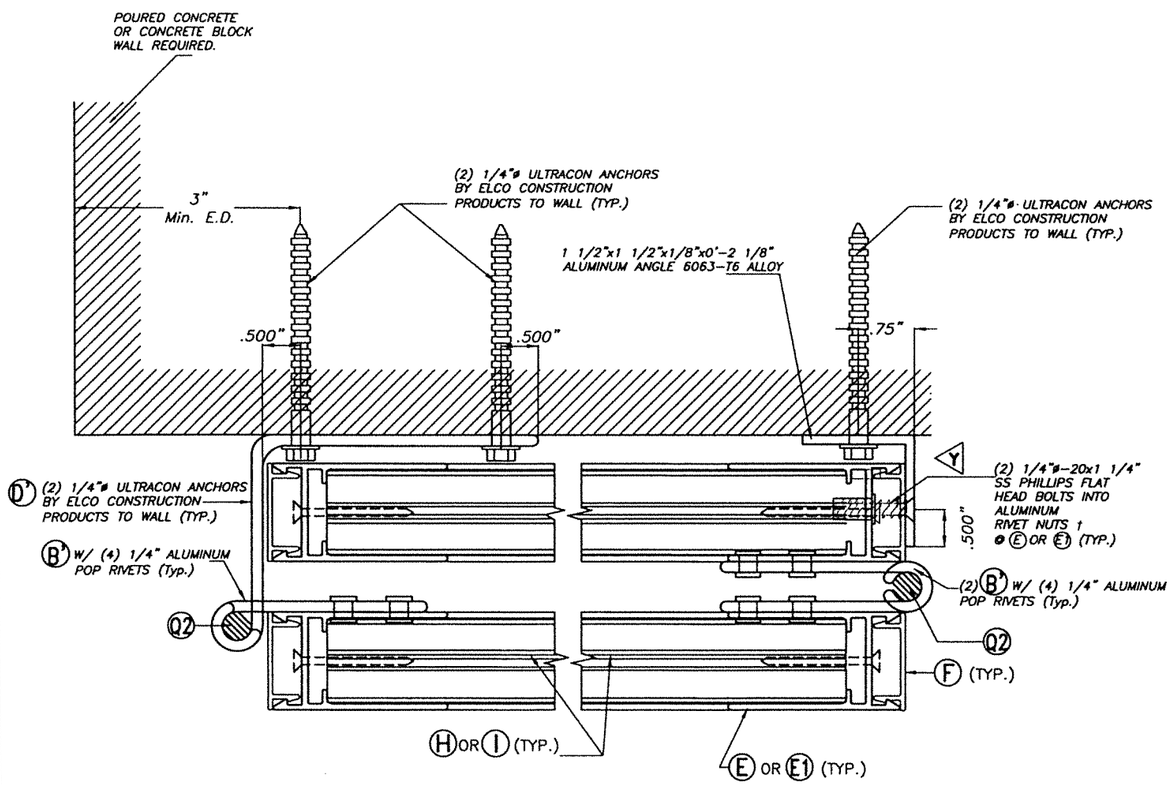

DETAIL X (NON HURRICANE POSITION)

SCALE 1/8"=1"

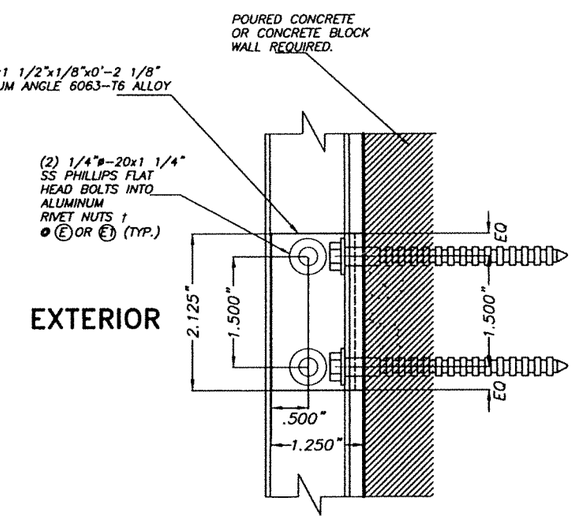

ELEVATION Y-Y

SCALE 1/8"=1"

† 1/4"ø-20x3/4"
AS DISTRIBUTED BY ALL POINTS SCREW, BOLT & SPECIALTY CO. (PART # 25CRFNA).

WALTER A. TILLIT JR. LICENSE No. 44167 STATE OF FLORIDA PROFESSIONAL ENGINEER

7/21/2023

FLORIDA BUILDING CODE (High Velocity Hurricane Zone)

© 2023 TILTECO, INC.

TILTECO INC.
TILLIT TESTING & ENGINEERING COMPANY
6355 N.W. 36th. St., Ste. 305, VIRGINIA GARDENS, FLORIDA 33166
Phone : (305)871-1530 . Fax : (305)871-1531
CA-0006719
WALTER A. TILLIT Jr., P.E.
FLORIDA Lic. # 44167

ASSA / BERTHA COLONIAL SHUTTER (WITH STORM BARS)

AMERICAN SHUTTER SYSTEMS ASSOC., INC.
4268 WEST ROADS DRIVE
WEST PALM BEACH, FL. 33407
PHONE: (800)432-2204
FAX: (561)209-8380

REV. No	DESCRIPTION	DATE	REV. No	DESCRIPTION	DATE
1	OLD 20-162	7/21/23	3	-	-
2	-	-	4	-	-

Y.M.
DRAWN BY:

7/21/2023
DATE:

23-132
DRAWING No

SHEET 11 OF 14

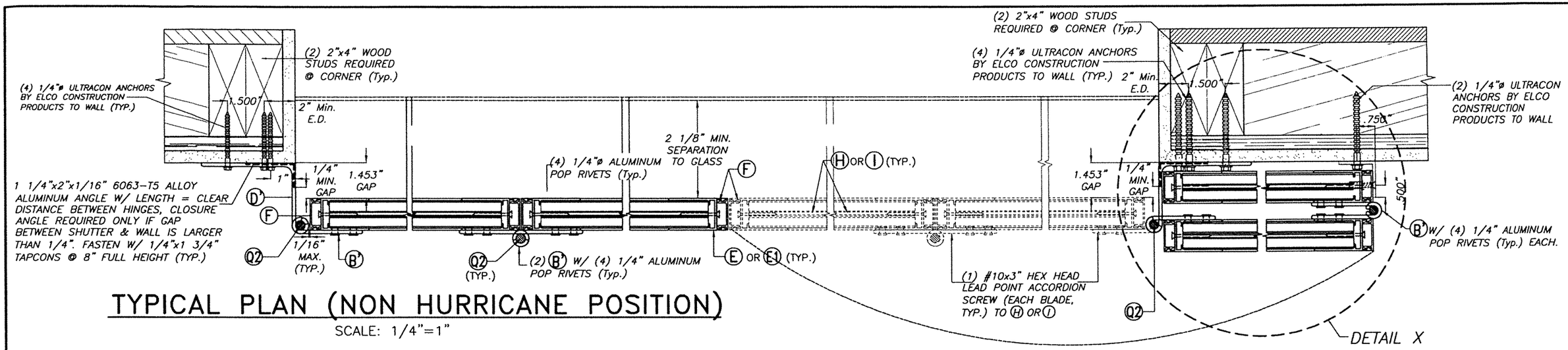

TYPICAL PLAN (NON HURRICANE POSITION)

SCALE: 1/4"=1"

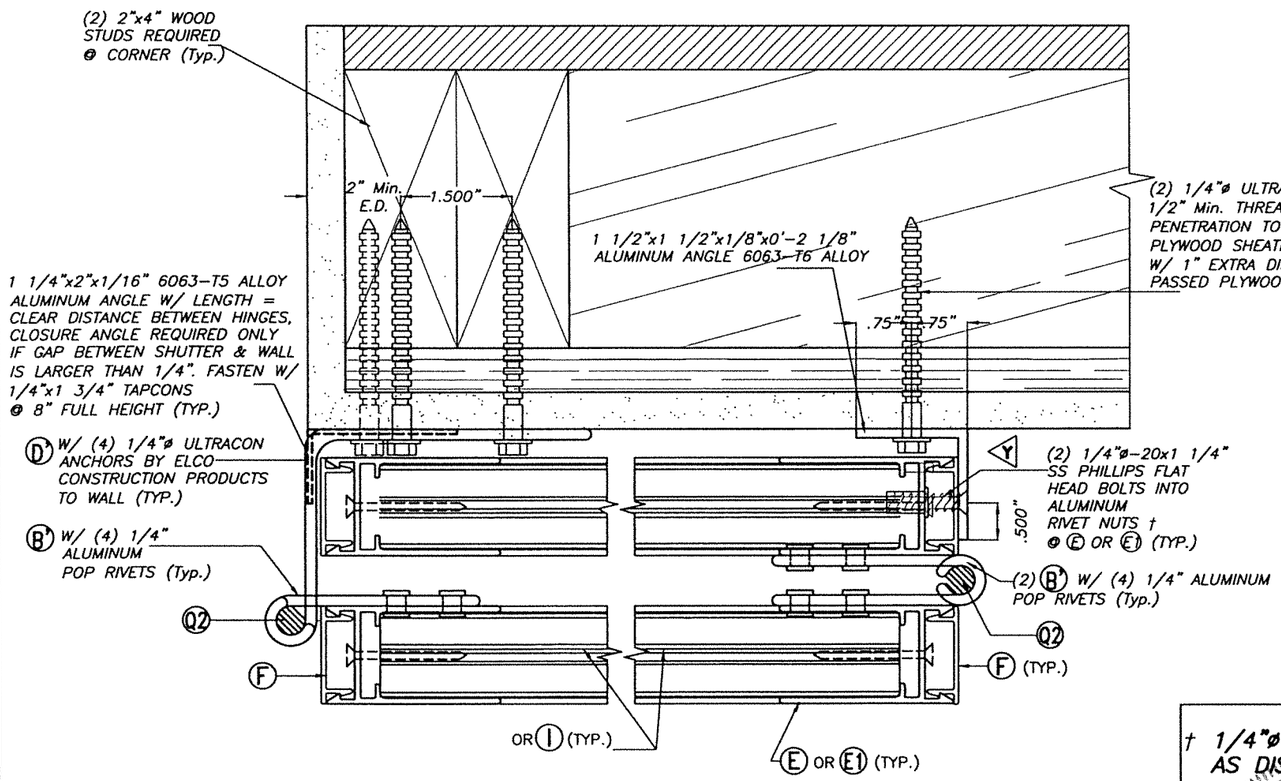

DETAIL X (NON HURRICANE POSITION)

SCALE 1/8"=1"

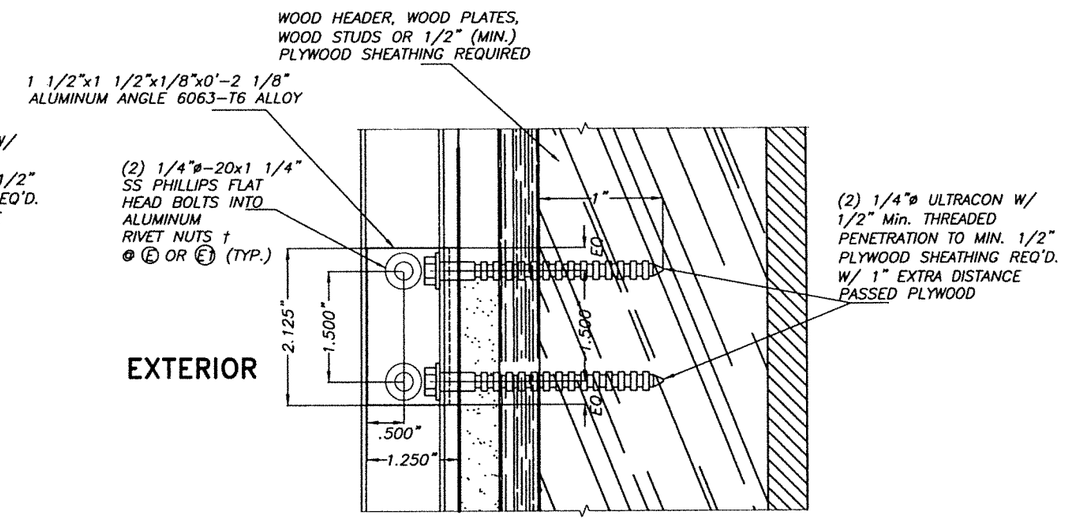

ELEVATION Y-Y

SCALE 1/8"=1"

† 1/4"ø-20x3/4" AS DISTRIBUTED BY ALL POINTS SCREW, BOLT & SPECIALTY CO. (PART # 25CRFNA).

FLORIDA BUILDING CODE (High Velocity Hurricane Zone)

WALTER A. TILLIT JR. LICENSE No. 44167 STATE OF FLORIDA PROFESSIONAL ENGINEER

7/21/2023

©2023 TILTECO, INC.

TILTECO INC.
TILLIT TESTING & ENGINEERING COMPANY
6355 N.W. 36th. St., Ste. 305, VIRGINIA GARDENS, FLORIDA 33166
Phone : (305)871-1530 , Fax : (305)871-1531
CA-0006719
WALTER A. TILLIT Jr., P.E.
FLORIDA Lic. # 44167

ASSA / BERTHA COLONIAL SHUTTER (WITH STORM BARS)

AMERICAN SHUTTER SYSTEMS ASSOC., INC.
4268 WEST ROADS DRIVE
WEST PALM BEACH, FL. 33407
PHONE: (800)432-2204
FAX: (561)209-8380

REV. No	DESCRIPTION	DATE	REV. No	DESCRIPTION	DATE
1	OLD 20-162	7/21/23	3	–	–
2	–	–	4	–	–

Y.M.
DRAWN BY:

7/21/2023
DATE:

23-132
DRAWING No

SHEET 12 OF 14

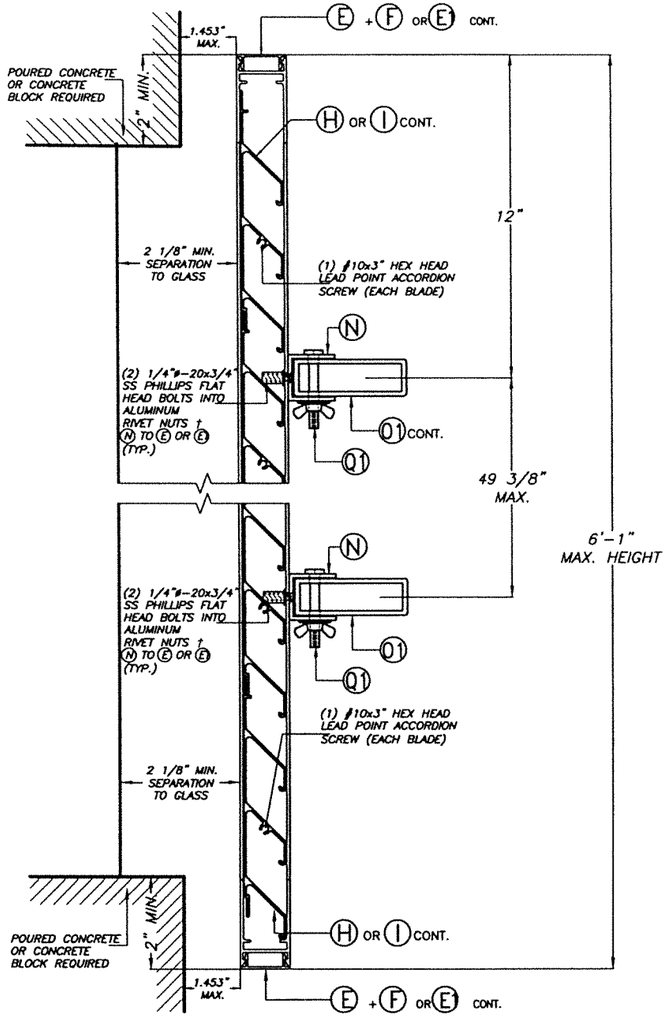

SECTION C'-C'

(WALL MOUNT)
HURRICANE POSITION
SCALE 1/4"=1"

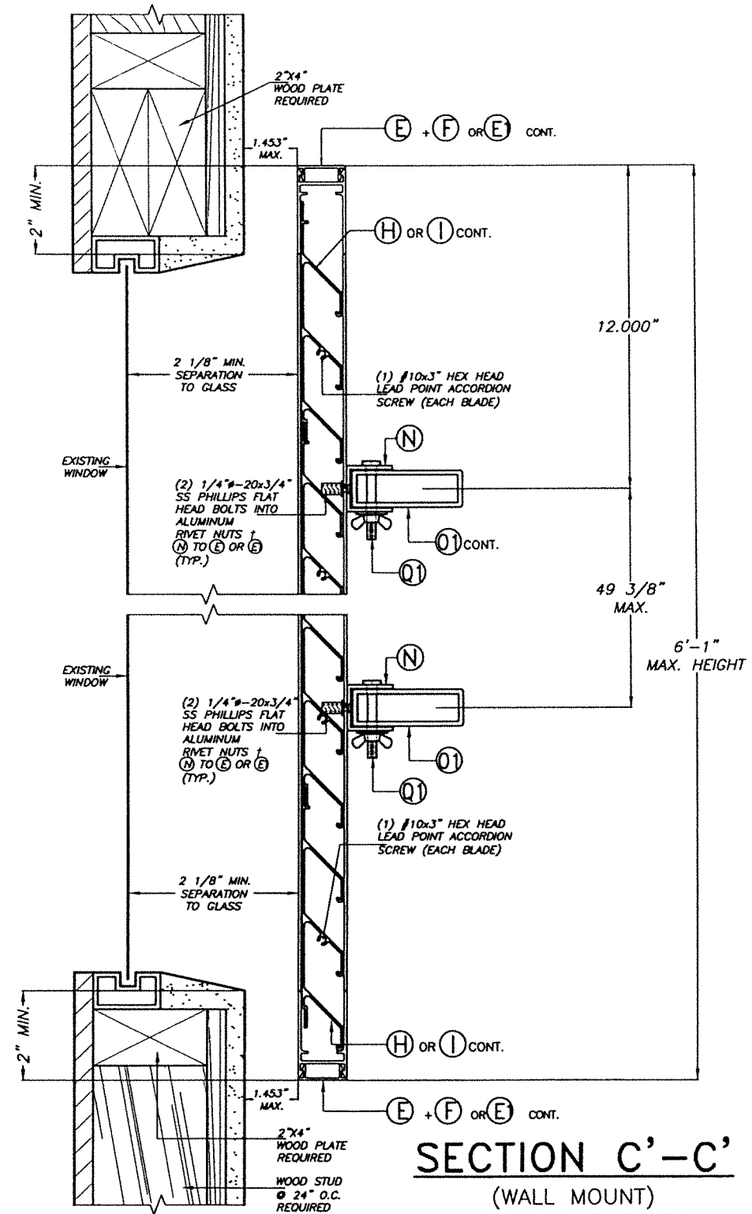

SECTION C'-C'

(WALL MOUNT)
HURRICANE POSITION
SCALE 1/4"=1"

† 1/4"ø-20x3/4"
AS DISTRIBUTED BY ALL POINTS SCREW, BOLT & SPECIALTY CO. (PART #25CRFNA).

WALTER A. TILLIT JR. LICENSE No. 44167 STATE OF FLORIDA PROFESSIONAL ENGINEER

7/21/2023

FLORIDA BUILDING CODE (High Velocity Hurricane Zone)

©2023 TILTECO, INC.

TILTECO INC.
TILLIT TESTING & ENGINEERING COMPANY
6355 N.W. 36th. St., Ste. 305, VIRGINIA GARDENS, FLORIDA 33166
Phone : (305)871-1530 Fax : (305)871-1531
CA-0006719
WALTER A. TILLIT Jr., P.E.
FLORIDA Lic. # 44167

ASSA / BERTHA COLONIAL SHUTTER (WITH STORM BARS)

AMERICAN SHUTTER SYSTEMS ASSOC., INC.
4268 WEST ROADS DRIVE
WEST PALM BEACH, FL. 33407
PHONE: (800)432-2204
FAX: (561)209-8380

REV. No	DESCRIPTION	DATE	REV. No	DESCRIPTION	DATE
1	OLD 20-162	7/21/23	3	–	–
2	–	–	4	–	–

Y.M.
DRAWN BY:

7/21/2023
DATE:

23-132
DRAWING No

SHEET 13 OF 14

† 1/4"ø-20x3/4"
AS DISTRIBUTED BY ALL POINTS SCREW,
BOLT & SPECIALTY CO. (PART #25CRFNA).

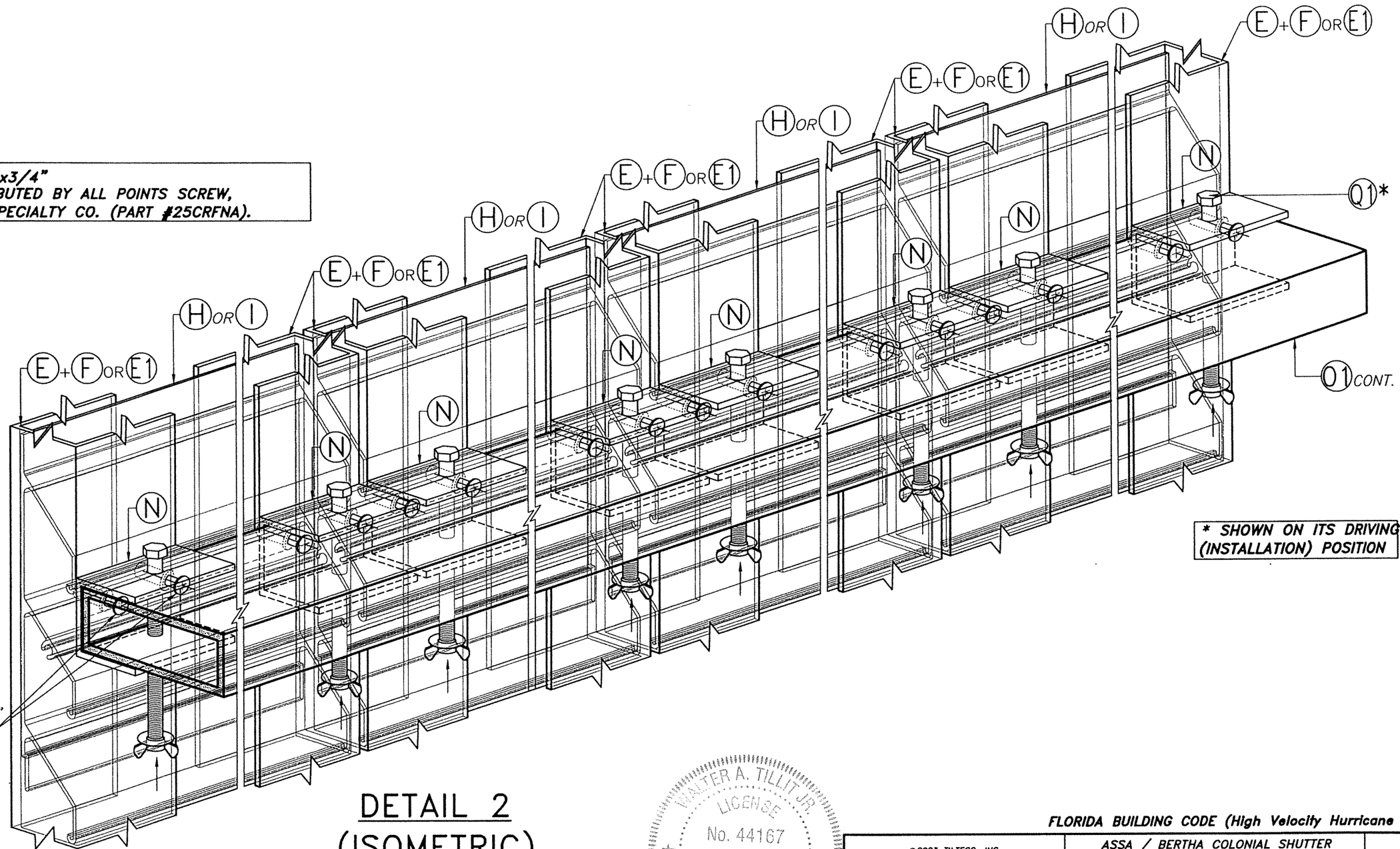

(2) 1/4"ø-20x3/4"
SS PHILLIPS FLAT
HEAD BOLTS INTO
ALUMINUM
RIVET NUTS †
(N) TO (E) OR (E1)
(TYP.)

* SHOWN ON ITS DRIVING (INSTALLATION) POSITION

DETAIL 2
(ISOMETRIC)
N.T.S

WALTER A. TILLIT JR. LICENSE No. 44167 STATE OF FLORIDA PROFESSIONAL ENGINEER

7/24/2023

FLORIDA BUILDING CODE (High Velocity Hurricane Zone)

©2023 TILTECO, INC.

TILTECO INC.
TILLIT TESTING & ENGINEERING COMPANY
6355 N.W. 36th. St., Ste. 305, VIRGINIA GARDENS, FLORIDA 33166
Phone : (305)871-1530 . Fax : (305)871-1531
CA-0006719
WALTER A. TILLIT Jr., P.E.
FLORIDA Lic. # 44167

ASSA / BERTHA COLONIAL SHUTTER
(WITH STORM BARS)

AMERICAN SHUTTER SYSTEMS ASSOC., INC.
4268 WEST ROADS DRIVE
WEST PALM BEACH, FL. 33407
PHONE: (800)432-2204
FAX: (561)209-8380

REV. No	DESCRIPTION	DATE	REV. No	DESCRIPTION	DATE
1	OLD 20-162	7/21/23	3	–	–
2	–	–	4	–	–

Y.M.
DRAWN BY:

7/21/2023
DATE:

23-132
DRAWING No

SHEET 14 OF 14